TIXER.RU

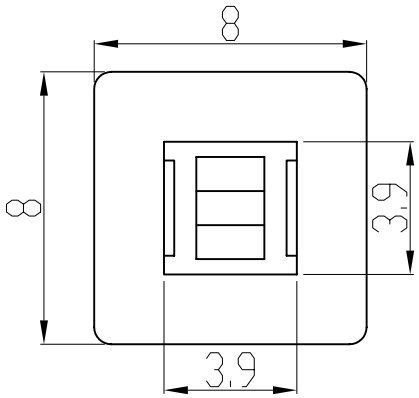

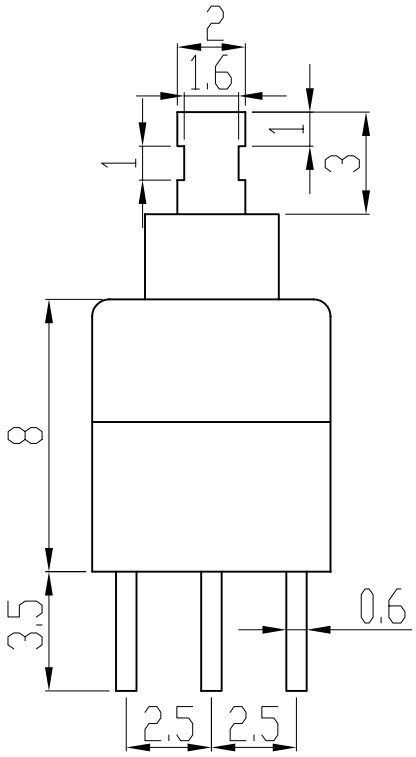

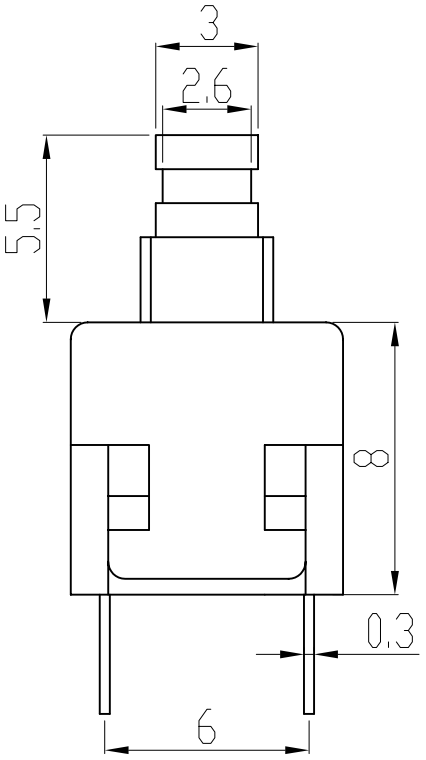

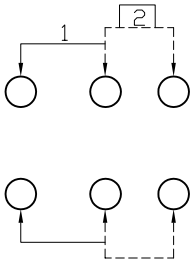

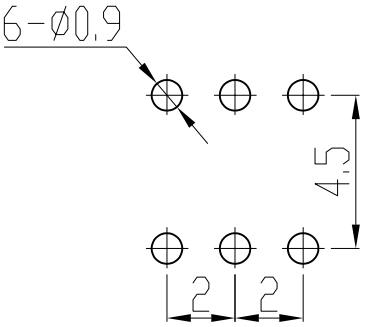

						HRC			BT1008 (PB22E08)